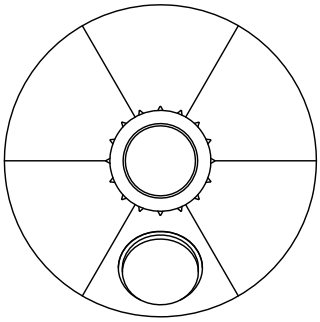

PLAN

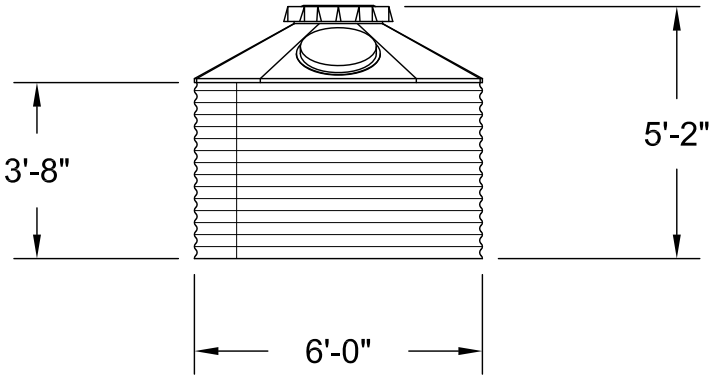

ELEVATION

		BY	DATE
CORGAL WATER TANKS	DWN	IU	3/12/10
WATER STORAGE TANKS, INC.	CKD	JH	3/12/10
1-800-463-1898 www.corgaltanks.com	ENG	JH	3/12/10

TITLE: MODEL 0601-WT-FS
CORGAL STEEL WATER STORAGE TANK
NOMINAL CAPACITY - 700 GALLONS (U.S.)

DWG. NO. 0601-WT-FS | REV. NO. B

SIZE A | SCALE 1/4"=1'-0" | SHEET 1 OF 1

THE DRAWING DEPICTED ON THIS PRINT AND THE INFORMATION CONTAINED HEREIN ARE PROPRIETARY TO Water Storage Tanks, Inc. AND SHALL NOT BE USED IN WHOLE OR PART WITHOUT THE WRITTEN CONSENT OF Water Storage Tanks, Inc.